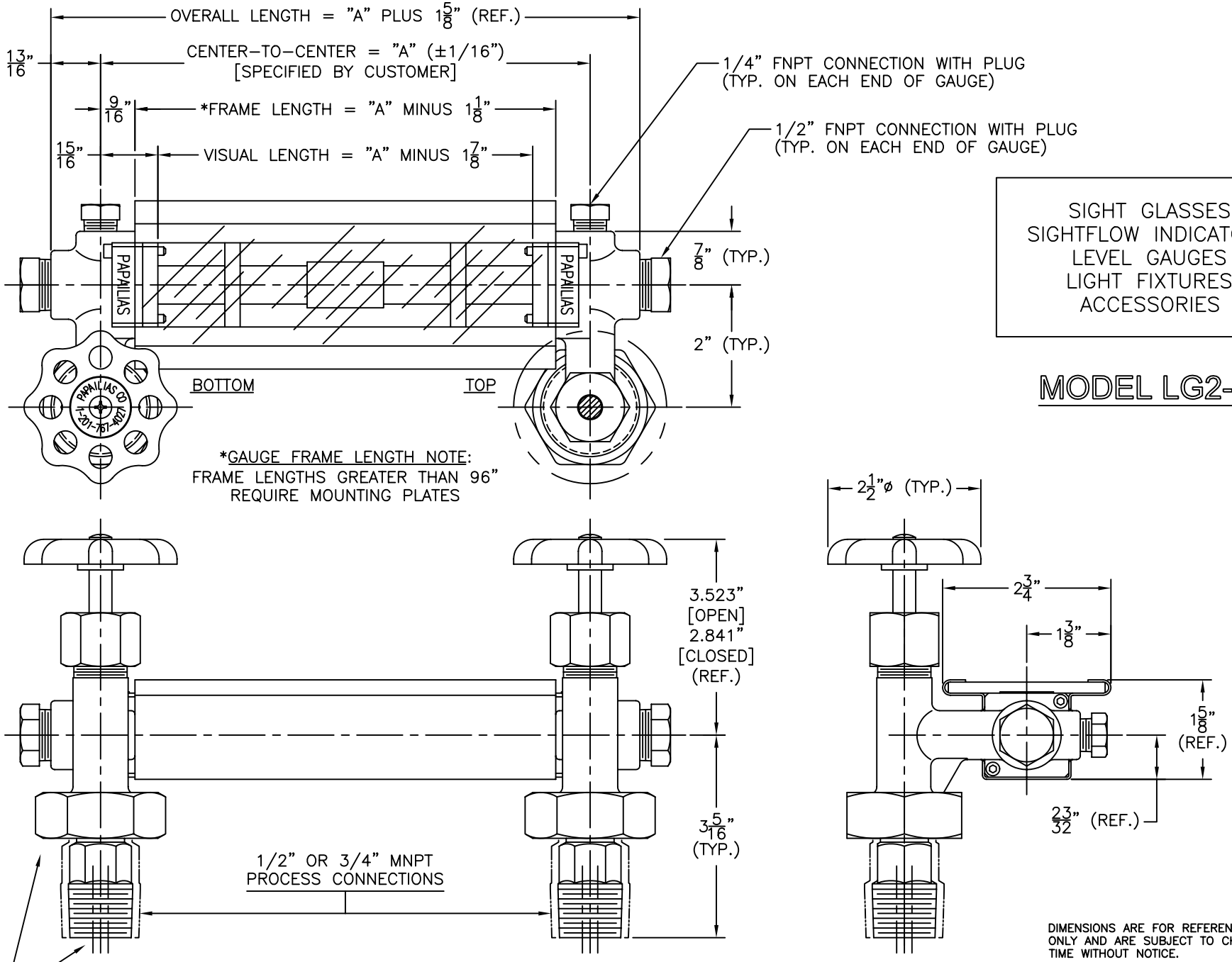

SIGHT GLASSES
SIGHTFLOW INDICATORS
LEVEL GAUGES
LIGHT FIXTURES
ACCESSORIES

MODEL LG2-V

DIMENSIONS ARE FOR REFERENCE PURPOSES ONLY AND ARE SUBJECT TO CHANGE AT ANY TIME WITHOUT NOTICE.

COPYRIGHT 2006 - J.G. PAPAILIAS CO., INC. - ALL RIGHTS RESERVED

REV.	DATE	BY	ECN	EXPLANATION:

PAPAILIAS INCORPORATED
245 PEGASUS AVENUE, NORTHVALE, NJ 07647

ARMORED TUBULAR LIQUID LEVEL W. VALVES
(OUTLINE DRAWING) SERIES LG2-V
WITH NPT MALE PROCESS CONNECTIONS

DATE: 12/11/06	SHEET: 1 OF 1	DRAWING NUMBER
DRN. BY: RPS	CHKD. BY: DS	LG2-V
SCALE: NTS	REVISION:	